rainbow skylight

standard rainbowvault

The **Standard Rainbowvault,** available in sizes bigger than the standard **Rainbowlite** units, enables the customer to use a fully assembled unit, easy to deliver and install. It is available with or without a ventilation system.

The **Standard Rainbowvault** consists of a self-flashing aluminium base frame, designed to fit onto any type of roof or curb.
A) Pitched roof - tiled, slate, or corrugated iron.
B) Flat roof - Concrete or IBR, etc.

The frame is a self-flashing aluminium base, welded on four corners and fixed onto the roof surface either by nails or screws.

The glazing system is an aluminium arch and clamp, totally leak-proof and maintenance free. The clamp is fitted onto the arch with self-tapping stainless steel screws in such a way that no leak is possible. It is fitted with a non-perishable EPDM rubber sealer for smooth thermal expansion and contraction of the glazing material.

Glazing material is available in both acrylic and poly-carbonate, in a choice of colours, allowing solar energy control (heat build-up) through the various light and thermal transmissions.

The ventilation system fitted along the base frame or the gable end, allows airflow. It can be controlled or fixed. When fitted, the ventilation system adds on only 100mm in height.

How to Specify

The following points should be specified when ordering a **Standard Rainbowvault** unit:

Product:	**Standard Rainbowvault**		
Size:	A (span) _____ x B (length) _____ (see table below)		
Shape:	☐ Low rise	☐ Semi-circular	
Aluminium Finish:	☐ Mill Finish	☐ Powder Coated	☐ Anodised
Colour:		☐ White ☐ Bronze ☐ Other _____	☐ Natural ☐ Bronze ☐ Other _____
Glazing Material:	☐ Acrylic	☐ Poly-carbonate	
Thickness:	☐ 4mm ☐ Other _____	☐ 3mm ☐ 4mm ☐ Other _____	
Colour:	☐ Clear ☐ Opal ☐ Light Bronze ☐ Medium Bronze ☐ Dark Bronze ☐ Other _____	☐ Clear ☐ Light Bronze ☐ Dark Bronze ☐ Other _____	
Type:	☐ Single Glazing	☐ Double Glazing	
Ventilation:	☐ Base-line Louvre	☐ Gable-end Louvre	

Other colours and thicknesses available on request

Shapes Available (Louvre Ventilation Optional):

Semi-circle vault
Gable with louvre

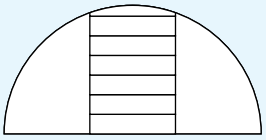

Low-rise vault
Plain gable

Standard sizes available:

600 x 2500	900 x 2500	1200 x 2500	1500 x 2500	1800 x 2500	2100 x 2500	2400 x 2500
600 x 3750	900 x 3750	1200 x 3750	1500 x 3750	1800 x 3750	2100 x 3750	2400 x 3750
600 x 5000	900 x 5000	1200 x 5000	1500 x 5000	1800 x 5000	2100 x 5000	2400 x 5000
600 x 6250	900 x 6250	1200 x 6250	1500 x 6250	1800 x 6250	2100 x 6250	2400 x 6250
600 x 7500	900 x 7500	1200 x 7500	1500 x 7500	1800 x 7500	2100 x 7500	2400 x 7500

Sizes other than standard are available to specification.

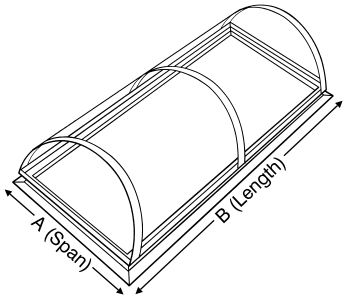

Rainbow Skylight S.A. (Pty) Ltd.
14 Staal Street, Kya Sand, Randburg P.O. Box 1291 Northriding 2162, South Africa
Tel: +27 11 462 4448/9 Fax: +27 11 462 4431 Email: info@rainbowskylight.co.za Web: www.rainbowskylight.co.za

rainbow skylight

standard rainbowvault

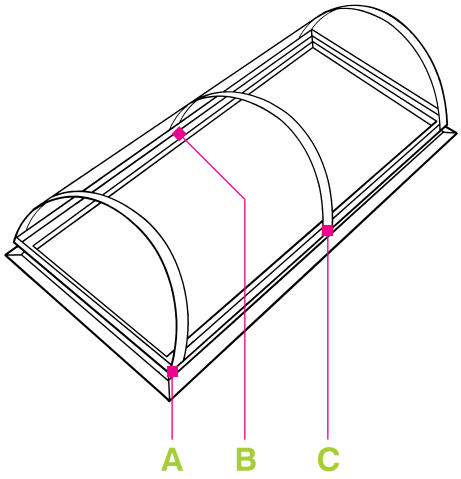

Cross Section A
Gable End

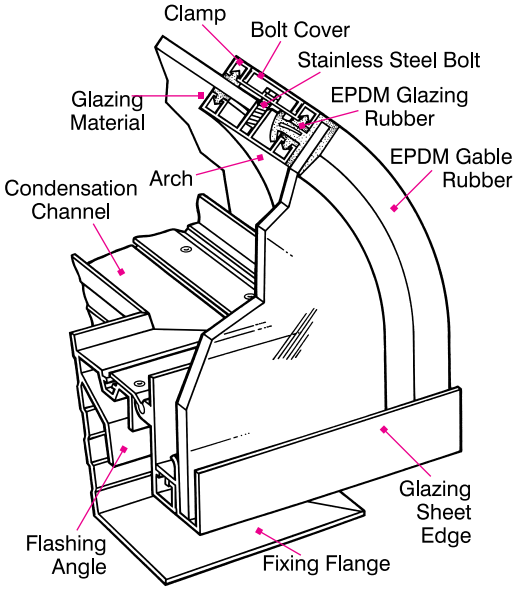

Cross Section B

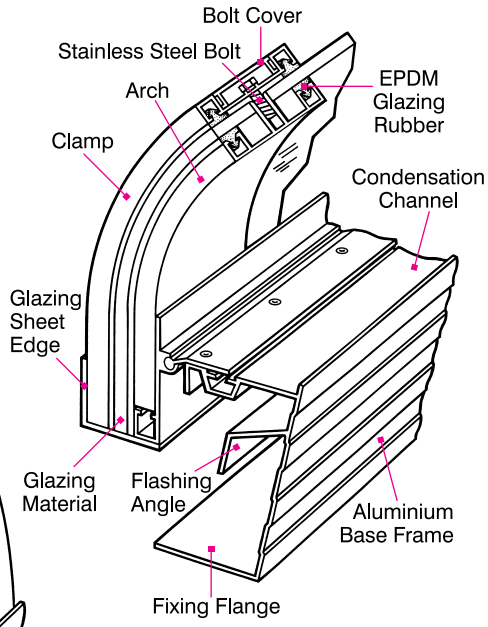

Cross Section C

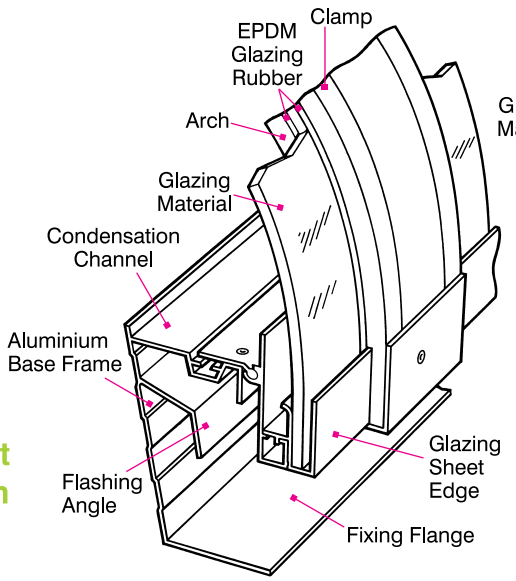

Cross Section of Rainbowvault with Louvre Ventilation System

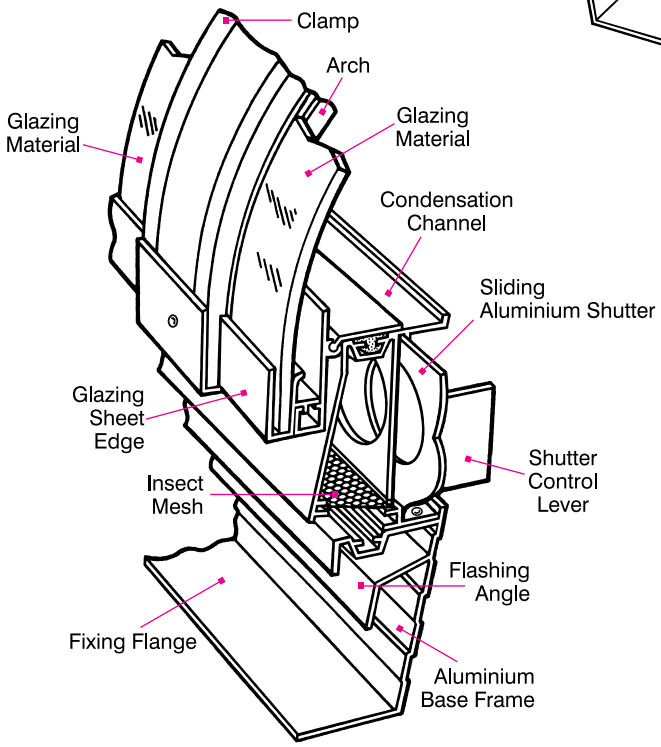
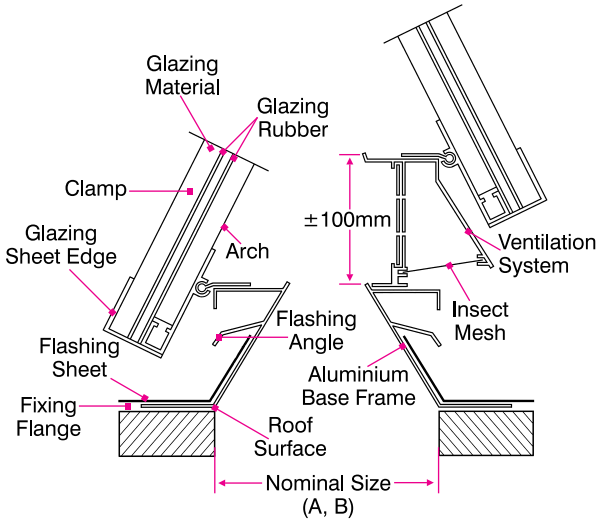
Rainbowvault with *(right)* and without *(left)* Ventilation System